BLUE PRINT FOR MODEL QUESTION PAPER – 4

SUBJECT : PHYSICS (33) **CLASS : II PUC**

Unit	Chapter	Topic	Teaching Hours	Marks allotted	1 mark (VSA)	2 mark (SA1)	3 mark (SA2)	5 mark (LA)	5 mark (NP)
1	1	Electric Charges and Fields	9	8	✓	✓		✓	
2	2	Electrostatic Potential and Capacitance	9	8			✓		✓
3	3	Current Electricity	15	13	✓	✓		✓	✓
4	4	Moving Charges and Magnetism	10	8			✓	✓	
5	5	Magnetism and Matter	8	7	✓	✓	✓		
	6	Electromagnetic Induction	7	6	✓	✓	✓		
6	7	Alternating Current	8	8			✓		✓
	8	Electromagnetic Waves	2	2		✓			
7	9	Ray Optics and Optical Instruments	9	8	✓	✓			✓
8	10	Wave Optics	9	8			✓	✓	
9	11	Dual nature of Radiation And Matter	6	5	✓		✓		
	12	Atoms	5	5	✓			✓	
10	13	Nuclei	7	6	✓				✓
	14	Semiconductor Electronics	12	10	✓	✓	✓	✓	
	15	Communication Systems	4	3	✓	✓			
TOTAL			**120**	**105**	**10**	**16**	24	30	25

MODEL QUESTION PAPER – 4
II P.U.C. PHYSICS (33)

Time: 3 hours 15 min. **Max. Marks: 70**

General instructions:

a) All parts are compulsory.

b) Answers without relevant diagram/ figure/circuit wherever necessary will not carry any marks.

c) Direct answers to the Numerical problems without detailed solutions will not carry any marks.

PART A

I. Answer the following **10 x 1 = 10**

1. What is the electric field strength inside a charged spherical conductor?
2. How does the resistivity of a conductor vary with temperature?
3. State Gauss's law in magnetism.
4. Name one application of eddy current.
5. What type of lens is used to correct the myopic eye?
6. What is the rest mass of photon?
7. Write one limitation of Bohr's atom model.
8. Define mean life of a radioactive element.
9. Write the logic symbol of NAND gate.
10. What is attenuation in communication system?

PART – B

II Answer any FIVE of the following questions. **5×2=10**

11. Write Coulomb's law in vector form and explain the terms.
12. Mention two limitations of ohm's law.
13. Write two differences between dia and paramagnetic substances.
14. Current in a coil falls from 5A to 0A in 0.1 s, calculate the induced emf in a coil if its self inductance is 4H.
15. Give two uses of UV rays.
16. Draw the ray diagram for the formation of image in case of a concave mirror when the object is placed at the centre of curvature of a mirror.
17. Distinguish between intrinsic and extrinsic semiconductors.
18. Draw the block diagram of AM transmitter.

PART – C

III Answer any FIVE of the following Questions. **5×3=15**

19. Derive the relation between electric field and electric potential.
20. Arrive at the expression for velocity selector using Lorentz force.
21. Mention any three salient features of Hysteresis loop.
22. Derive an expression for motional emf.
23. Mention three power losses in a transformer.

24. Using Huygen's wave theory of light, show that the angle of incidence is equal to angle of reflection in case of reflection of a plane wavefront by a plane surface.
25. Explain three facts of photoelectric effect using Einstein's photoelectric equation.
26. Explain the working of a Zener diode as a voltage regulator.

PART – D

IV Answer any TWO of the following Questions 2×5=10

27. Obtain an expression for electric field for an electric dipole along its axis.
28. Derive an expression for equivalent emf and equivalent internal resistance when two cells are connected in parallel.
29. Derive an expression for the magnetic field at a point along the axis of circular current loop.

V Answer any TWO of the following Questions 2×5=10

30. What is interference of light? Arrive at the conditions for constructive and destructive interference by assuming the expression for intensity.
31. Derive an expression for total energy of an electron in hydrogen like atom assuming radius of the orbit.
32. Explain the working of npn transistor as an amplifier in ce mode

VI Answer any THREE of the following. 3×5=15

33. Two point charges 5×10^{-8}C and -3×10^{-8}C are located 16cm apart. At what points on the line joining the two charges is the electric potential zero?
34. Determine the current through the galvanometer in the circuit given P=2Ω, Q = 4Ω, R = 8Ω , S = 4Ω, G =10Ω E = 5V and r =0.

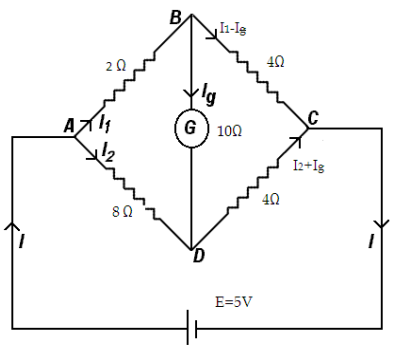

35. Calculate the resonant frequency in LCR circuit with inductance 2.0 H, capacitance 32 μF and resistance 10 Ω. What is the Q value of this circuit?
36. An object of size 3 cm is placed 14 cm in front of a concave lens of focal length 21 cm. Calculate position and size of the image.
37. Consider the fission process of $_{92}U^{238}$ by fast neutrons. In one fission event no neutrons emitted and final end products after beta decay of primary fragments are $_{58}Ce^{140}$ and $_{44}Ru^{99}$ Calculate Q for this process.

    Mass of $_{92}U^{238}$ = 238.05079 u, Mass of $_{58}Ce^{140}$ = 139.90543 u

SCHEME OF EVALUATION FOR PHYSICS MODEL QUESTION PAPER – 4

Q.NO	ANSWERS	MARKS
I.	**Answer the following PART-A**	**10 x 1 = 10**
1	What is the electric field strength inside a charged spherical conductor? Zero	**1 mark**
2	How does the resistivity of a conductor vary with temperature? Resistivity is directly proportional to temperature	**1 mark**
3	State Gauss's law in magnetism. The net magnetic flux through any closed surface is always zero.	**1 mark**
4	Name one application of eddy current. Speedometer/Induction furnace any one relevant answer.	**1 mark**
5	What type of lens is used to correct the myopic eye? Concave lens of suitable focal length.	**1 mark**
6	What is the rest mass of photon? Zero	**1 mark**
7	Write one limitation of Bohr's atom model. It is applicable only for hydrogen and hydrogen like atoms or any other relevant.	**1 mark**
8	Define mean life of a radioactive element. The ratio of total life time of all the atoms of radioactive element and the total number of atoms present initially.	**1 mark**
9	Write the logic symbol of NAND gate. 	**1 mark**
10	What is attenuation in communication system? The loss of strength of a signal while propagating through a channel.	**1 mark**
II	**PART-B**	
11	Write Coulomb's law in vector form and explain the terms. $\vec{f}_{12} = k\frac{q_1 q_2}{r^2}\hat{r}_{21}$ Where q_1 and q_2 are two point charges, r is separation between the charges and $\hat{r}_{21}$ is the unit vector directed from q_2 to q_1.	**2 marks**
12	Mention two limitations of ohm's law. It is applicable only for the metallic conductor when other physical conditions are constants. Not applicable for semiconductor /super conductor/ electrolytes.	**1 mark** **1mark**
13	Write two differences between dia and paramagnetic substances.	**1 mark each**

Diamagnetic substances	Paramagnetic substances
1. These substances are feebly repelled by a powerful magnet.	1. These substances are feebly attracted by a powerful magnet.
2. Relative permeability of these substances is slightly less than one.	3. Relative permeability of these substances is slightly more than one.

14	Current in a coil falls from 5A to 0A in 0.1 s, calculate the induced emf in a coil if its self inductance is 4H. $E = L\frac{dI}{dt}$ $E = 4 \times \frac{5}{0.1} = 200V$	**1 mark** **1 mark**
15	Give two uses of UV rays. 1. In the analysis of the structure of organic compounds. 2. In high resolving power microscopes. 3. In the study of bacteria. **Any two uses**	**1 mark each**
16	Draw the ray diagram for the formation of image in case of a concave mirror when the object is placed at the centre of curvature of a mirror. **Arrow mark must be shown** 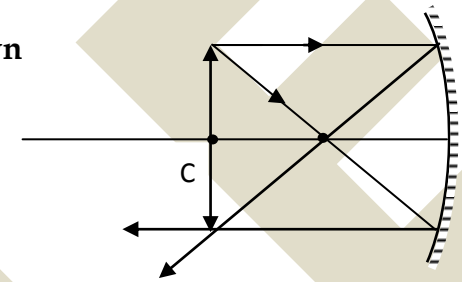 	**2 marks**
17	Distinguish between intrinsic and extrinsic semiconductors. Intrinsic semiconductors / Extrinsic semiconductors These are the pure semiconductors. / These are the impure semiconductors. Electron density is equal to the hole density / Electron density is not equal to the hole density. Conductivity is low / Conductivity is high Any two differences	**1 mark each**
18	Draw the block diagram of AM transmitter. 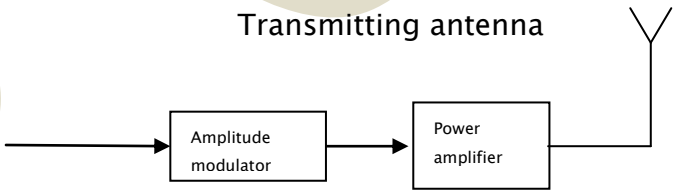 	**2 marks**
III	**Three marks/Answer any Five**	
19	Derive the relation between electric field and electric potential. 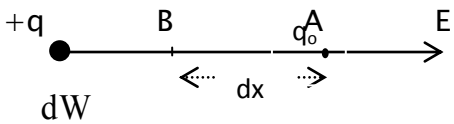 $dV = \frac{dW}{q_o}$ $E = -\frac{dV}{dx}$	**1 mark** **1 mark** **1 mark**

20	Arrive at the expression for velocity selector using Lorentz force. $\vec{F} = q(\vec{E} + \vec{v} \times \vec{B})$ If $\theta = 90^0$ and Eq = qvB $v = E/B$	**1 mark** **1 mark** **1 mark**
21	Define the terms (a) Hysteresis (b) Retentivity and (c) coersivity. Hysteresis: It is the phenomenon of lagging of magnetic induction behind the magnetic intensity, when a ferromagnetic material is subjected to cycle of magnetization. Retentivity: It is the amount of magnetic induction left in the specimen of ferromagnetic material when magnetic intensity is reduced to zero. *Coercivity:* It is the amount of reverse magnetic intensity required to remove the residual magnetism.	**1 mark each**
22	Derive an expression for motional emf. Figure $\phi = B \times l \times x$ $e = B\,l\,v$	**1 mark** **1 mark** **1 mark**
23	Mention three power losses in a transformer. 1) Loss due to heating. 2) Loss due to flux leakage. 3) Loss due to eddy currents. 4) Loss due to hysteresis . Any three	**1 mark each**
24	Using Huygen's wave theory of light, show that the angle of incidence is equal to angle of reflection in case of reflection of a plane wavefront by a plane surface. 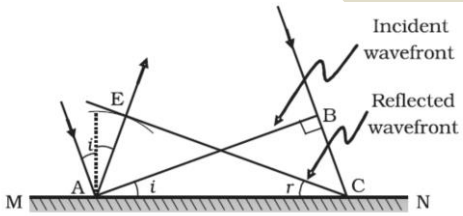 AE = BC = *v*t The triangles EAC and BAC are congruent and therefore, the angles *i* and *r* (as shown in Fig) would be equal. This is the *law of reflection*.	**1 mark** **1 mark** **1 mark**
25	Explain three facts of photoelectric effect using Einstein's photoelectric equation. 1) The photoelectric emission is an instantaneous process without any apparent time lag ($\sim 10^{-9}$s or less), even when the incident radiation is made exceedingly dim. 2) For every photo emissive surface there is a certain minimum frequency of the incident radiation below which there is no photoelectric effect, called threshold frequency and the corresponding wavelength is called threshold wavelength no matter how intense the incident light is. Threshold frequency is different for different materials. 3) For a frequency greater than the threshold frequency, the strength of the photoelectric current is directly proportional to the intensity of the incident radiation.	**1 mark each**

	4) For a given photosensitive material and frequency of incident radiation, saturation current is found to be directly proportional to the intensity of incident radiation whereas the stopping potential is independent of its intensity. Any three	
26	Explain the working of a Zener diode as a voltage regulator. Any increase/decrease in the input voltage results in, increase/decrease of the voltage drop across R_s *without any change in voltage across the Zener diode*. 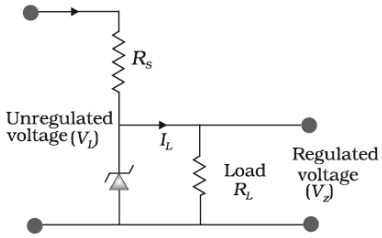 	**Circuit diagram 1mark** **2 marks**
IV	**Five marks/Answer any Two**	**PART-D**
27	Obtain an expression for electric field for an electric dipole along its axis. 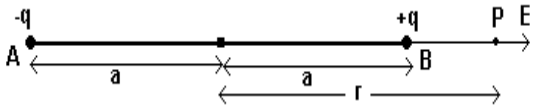 electric field at P due to dipole is given by $\vec{E} = \frac{1}{4\pi\varepsilon_0} q \left[\frac{1}{(r-a)^2} - \frac{1}{(r+a)^2} \right] \hat{P}$ Where $\hat{p}$ is the unit vector along the dipole axis (from $-q$ to q). $\vec{E} = \frac{q}{4\pi\varepsilon_0} \frac{4ar}{(r^2 - a^2)^2} \hat{p}$ For a short dipole, a<<r $\vec{E} = \frac{1}{4\pi\varepsilon_0} \frac{4qa}{r^3} \hat{p}$ $\boxed{\vec{E} = \frac{1}{4\pi\varepsilon_0} \frac{2\vec{p}}{r^3} \hat{p}}$ r>>a	**1mark** **1mark** **1mark** **1mark** **1mark**
28	Derive an expression for equivalent emf and equivalent internal resistance when two cells are connected in parallel. 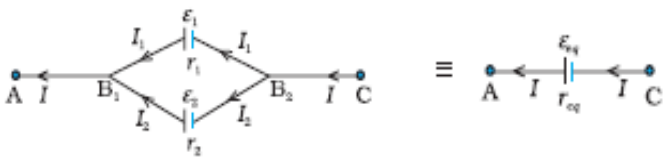 $I = I_1 + I_2$ $V = \frac{\varepsilon_1 r_2 + \varepsilon_2 r_1}{r_1 + r_2} - I \frac{r_1 r_2}{r_1 + r_2}$ $V = \varepsilon_{eq} - I\, r_{eq}$ $\varepsilon_{eq} = \frac{\varepsilon_1 r_2 + \varepsilon_2 r_1}{r_1 + r_2}$	**1mark** **1mark** **1mark** **1mark**

	$r_{eq} = \dfrac{r_1 r_2}{r_1 + r_2}$	**1mark**
29	Derive an expression for the magnetic field at a point along the axis of circular current loop. 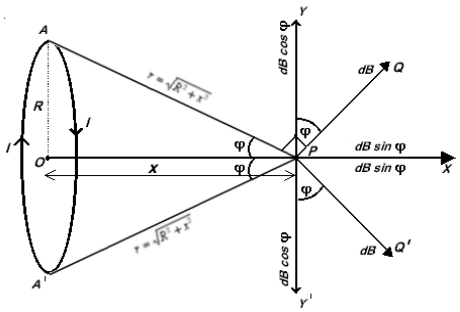 $dB = \dfrac{\mu_0}{4\pi}\dfrac{I\,dl\sin\theta}{r^2}$ 2 dB sinφ = 2 $\dfrac{\mu_0}{4\pi}\dfrac{I\,dl\sin\theta}{r^2}$ sin φ along PX. ∴ Magnetic field at P due to one complete turn of the coil $B_1 = \sum \dfrac{\mu_0}{4\pi}\dfrac{2I\,dl\,R}{r^3}$ $B_1 = \dfrac{\mu_0}{4\pi}\dfrac{2\pi I\,R^2}{\left(R^2+X^2\right)^{3/2}}$ along PX	**1mark** **1mark** **1mark** **1mark** **1mark**
V	**Five marks/Answer any Two**	
30	What is interference of light? Arrive at the conditions for constructive and destructive interference by assuming the expression for intensity. *Modification in the intensity of light due to the superposition of two or more light waves from coherent source in the region of crossover is called interference of light.* Arriving at the conditions for constructive interference $p.d = n\lambda$ and $phase\,difference = 2n\pi$ where n = 0, 1, 2, 3, etc Arriving at the conditions for destructive interference $p.d = (2n+1)\dfrac{\lambda}{2}$ $phase\,difference = (2n+1)\pi$ where n = 0, 1, 2, 3, etc.,	**1mark** **2marks** **2marks**
31	Derive an expression for total energy of an electron in hydrogen like atom assuming radius of the orbit. $r_n = \dfrac{\varepsilon_0 n^2 h^2}{\pi m Z e^2}$ P.E = $-\dfrac{1}{4\pi\varepsilon_0}\dfrac{Ze^2}{r_n}$ $K.E = \dfrac{1}{2}\dfrac{1}{4\pi\varepsilon_0}\dfrac{Ze^2}{r_n}$ $E_n = -\dfrac{mZ^2e^4}{8\varepsilon^2{}_0 n^2 h^2}$	**1mark** **1mark** **2mark** **1mark**

32	Explain the working of npn transistor as an amplifier in ce mode. 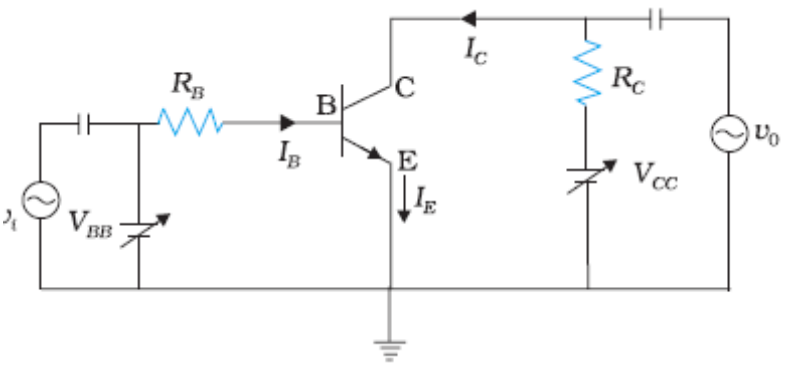 $V_{BB} = I_B R + V_{BE}$ and $V_{CE} = V_{CC} - I_C R_L$ *with explanation* $A = \beta \frac{R_L}{R_{IN}}$	**2 marks** **2 mark** **1 mark**
VI	**Five marks/Answer any Three**	
33	Two point charges 5×10^{-8}C and -3×10^{-8}C are located 16cm apart. At what points on the line joining the two charges is the electric potential zero? $V = \frac{1}{4\pi\varepsilon_0}\frac{q}{r}$ Between the two charges $\frac{1}{4\pi\varepsilon_0}\frac{q_1}{x} = \frac{1}{4\pi\varepsilon_0}\frac{q_2}{(16-x)}$ 10 cm from +ve charge Outside the two charges $\frac{1}{4\pi\varepsilon_0}\frac{q_1}{x} = \frac{1}{4\pi\varepsilon_0}\frac{q_2}{(16+x)}$ 40 cm from +ve charge	**1 mark** **2 marks** **2 marks**
34	Determine the current through the galvanometer in the circuit given P=2Ω, Q = 4Ω, R = 8Ω , S = 4Ω, G =10Ω E = 5V and r =0. $2I_1 + 10I_g - 8I_2 = 0$ $4I_1 - 18I_g - 4I_2 = 0$ $12I_1 + 10I_g - 8I_2 = 0$ By solving the above equations $I_g = 0.12A$ 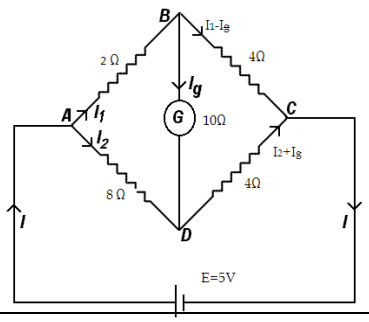 	**1 mark each** **2 marks**

35	Calculate the resonant frequency in LCR circuit with inductance 2.0 H, capacitance 32 μF and resistance 10 Ω. What is the Q value of this circuit? $\omega = \frac{1}{\sqrt{LC}}$ Substitution Calculation of ω = 125 Hz $Q = \frac{1}{R}\sqrt{\frac{L}{C}} = \frac{\omega L}{R} = \frac{1}{\omega RC}$ Substitution Calculation of Q = 25	**1 mark** **1 mark** **1 mark** **1 mark** **1 mark**
36	An object of size 3 cm is placed 14 cm in front of a concave lens of focal length 21 cm. Calculate position and size of the image. Solution: $\frac{1}{v} - \frac{1}{u} = \frac{1}{f}$ Substitution Calculation of v = 8.4 cm $m = \frac{\text{height of the image}}{\text{height of the object}} = \frac{-v}{u}$ Height of the image = 1.8 cm	**1 mark** **1 mark** **1 mark** **1 mark** **1 mark**
37	The half life of $_{38}Sr^{90}$ isotope is 28 years. What is the rate of disintegration of 15 mg of this isotope? (Given Avogadro No = 6.023×10^{23}) $R = \lambda N$ N=1.004×10^{20} $\lambda = \frac{0.693}{T}$ $\lambda = 7.848\times10^{-10} s^{-1}$ $R = 7.879\times10^{10} Bq$	**1 mark** **1 mark** **1 mark** **1 mark** **1 mark**